Power Electronics Project Report

Simulation and Analysis of a Three-Phase SPWM Inverter Driving an Induction Motor with Open-Loop V/f Control

by: Zachary Newsom

1. Design Analysis (Calculations)

1.1 System Overview

This project models and analyzes a three-phase inverter system supplying a standard industrial 5 HP induction motor using open-loop V/f control. The inverter receives power from an ideal 1200-V DC voltage source. The inverter output is controlled via Sinusoidal Pulse Width Modulation (SPWM) to generate a variable-frequency, variable-amplitude three-phase AC signal, suitable for controlling motor speed while maintaining magnetic flux at an optimal level under open-loop V/f control.

The project was modeled with a solar-powered induction motor water pump system in mind, which for small-medium applications typically have a 2.0-3.7kW motor fitted to their pump load. This is the reason our chosen motor is rated for 5 HP, which equates to 3.7 kW. How the pump load was modeled will be discussed in a later section.

For the sinusoidal-PWM inverter switching control scheme, bipolar switching was used with a 15 kHz triangular switching waveform. The reference sine waves had their amplitude and frequency modulated depending on an RPM setpoint. The sine wave frequency is set to be the motor's synchronous-speed (4-pole) frequency from the required RPM and the amplitude of the sine waves is controlled based on that frequency – this open-loop V/f control will be discussed in greater detail in the next section.

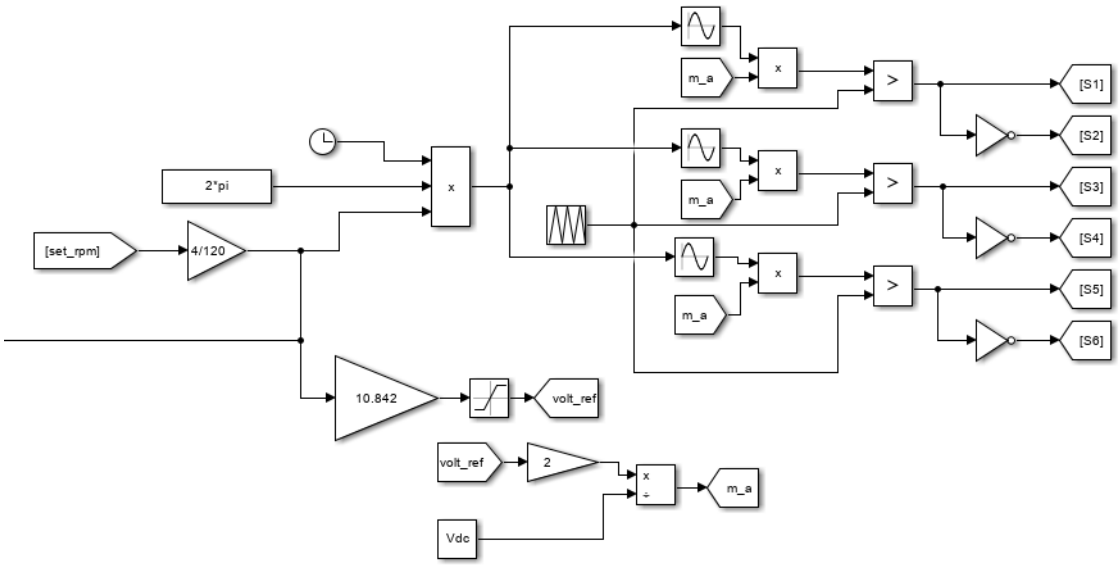

Figure 1: Switching Controller with Open-Loop V/f Control

Attached to each phase there are two IGBTs with reverse diodes as shown in Figure 2 below. We extract a neutral point to use as a ground (mostly for simulation purposes) with two equal RC pairs in series. Then, from the switch's outputs we filter out switching harmonics and other non-desirable frequencies with an RLC Low-pass circuit shown in Figure 3. The parameters of the system are R = 0.1 Ω, L = 2 mH, and C = 258 μF. The cutoff frequency for this filter is approximately 221.6 Hz and its Bode Plot is displayed in Figure 4. The primary concern was to filter out the switching frequency from SPWM at 15 kHz. The output of the filter feeds directly into the induction motor.

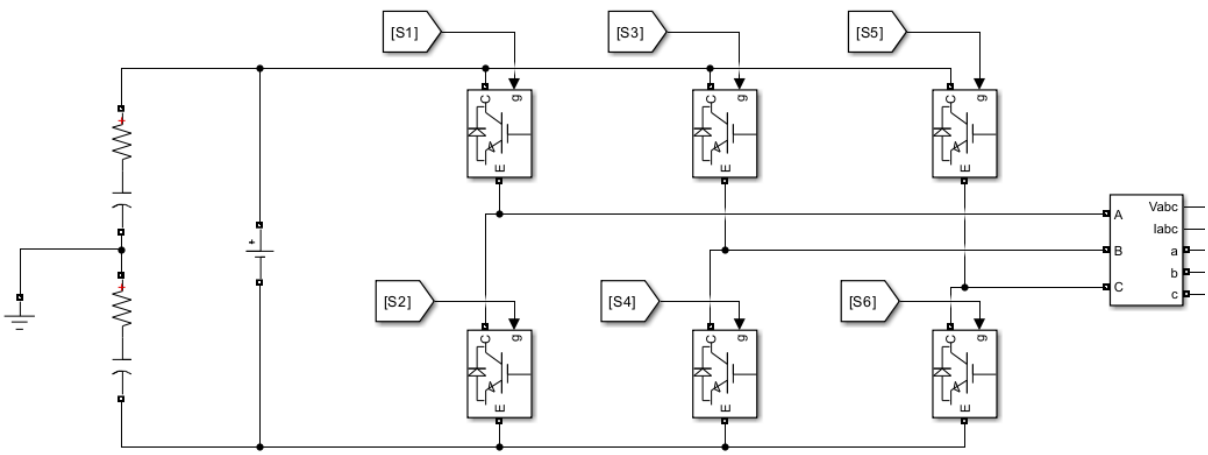

Figure 2: Topology of the Three-Phase Inverter

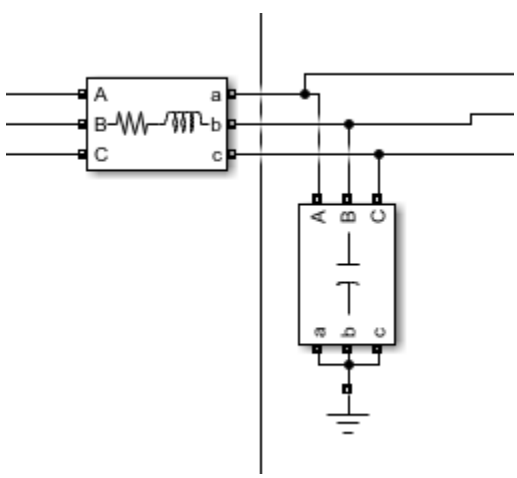

Figure 3: RLC Low-Pass Filter after the Inverter. R = 0.1 Ω, L = 2 mH, C = 258 μF.

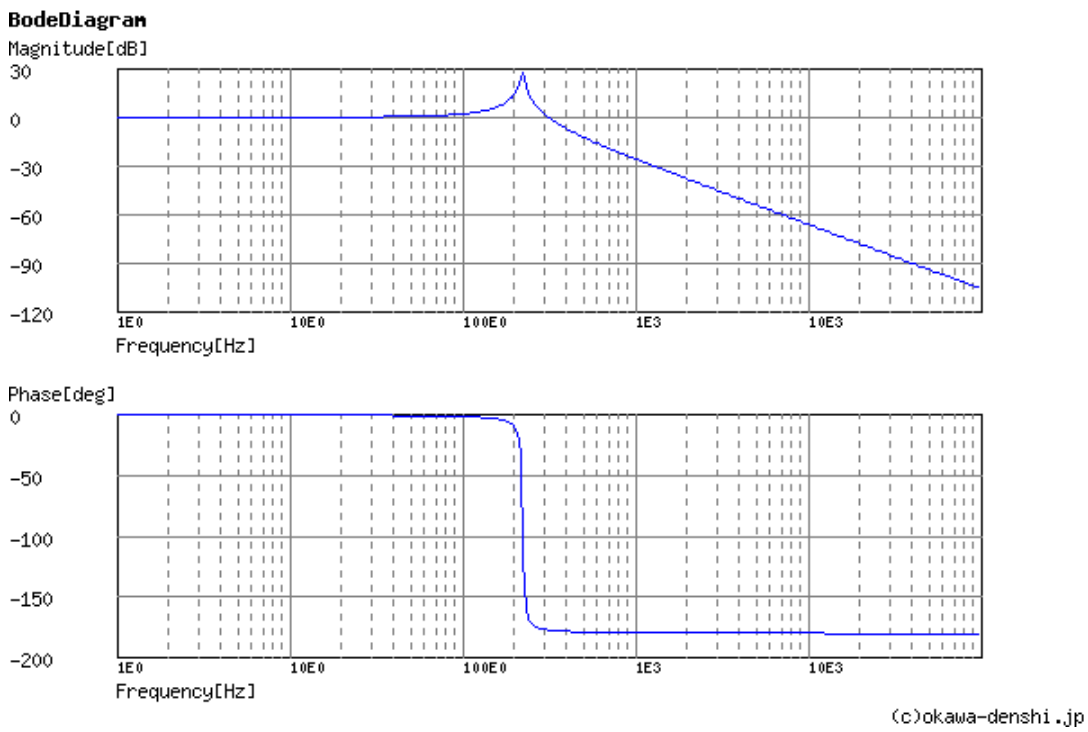

Figure 4: Bode plot for the RLC Low-Pass Filter in Figure 3. The primary concern is filtering out the switching frequency from SPWM at 15 kHz.

1.2 V/f Control

The control strategy is based on the principle that in an induction motor, torque is proportional to the supply voltage and inversely proportional to frequency. Therefore, a constant voltage-to-frequency (V/f) ratio ensures a consistent air gap flux, preventing magnetic saturation or weak magnetic phenomenon, and thus maintaining torque stability throughout the speed range.

Below in Figure 5 and Figure 6 we can see the comparison of the frequency-varied speed-torque curves in a V/f controlled induction motor versus a non-controlled induction motor and the difference in speed/slip seed setpoints based on an arbitrary load's speed-torque curve.

In practicality, we also have to put a limit on the supplied voltage to the induction motor so as to avoid insulation breakdown in the stator windings. We also have to ensure that voltage is boosted slightly from the linear V/f relationship at low frequencies to provide enough power to overcome stator winding impedances.

In the open-loop V/f controller implemented for this project, we don't have exact control of the final rotor speed, as slip speed of the induction motor is not accounted for as it would be in a closed-loop system with a tachometer on the rotor shaft. Thus, the relationship between RPM set-point and frequency is defined simply by the synchronous speed formula $N_s(rpm) = \frac{120 \cdot f}{p}$, where p = # of poles. The implementation of a closed-loop system was attempted, but the simulation of such a system and the PI controller necessary to close the error between desired rotor speed and actual rotor speed was problematic for unknown reasons (though I definitely would like to come back to this project with more simulation experience!)

Ultimately, for most applications of induction motors, especially for fan and pump loads like I'm modeling here, precise speed control is NOT required.

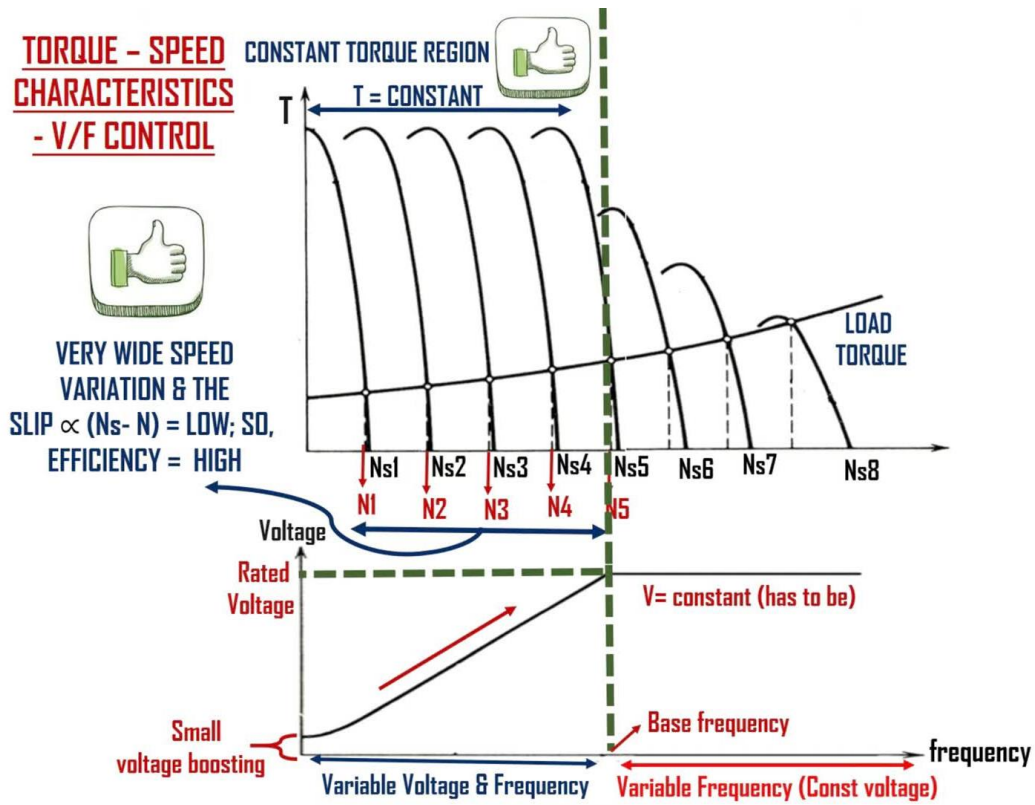

Figure 5: V/f Controlled Induction Motor Speed-Torque Characteristic at Different Frequencies, with an Input Voltage Cut-off to Prevent Insulation Breakdown in Stator Windings (Source 1).

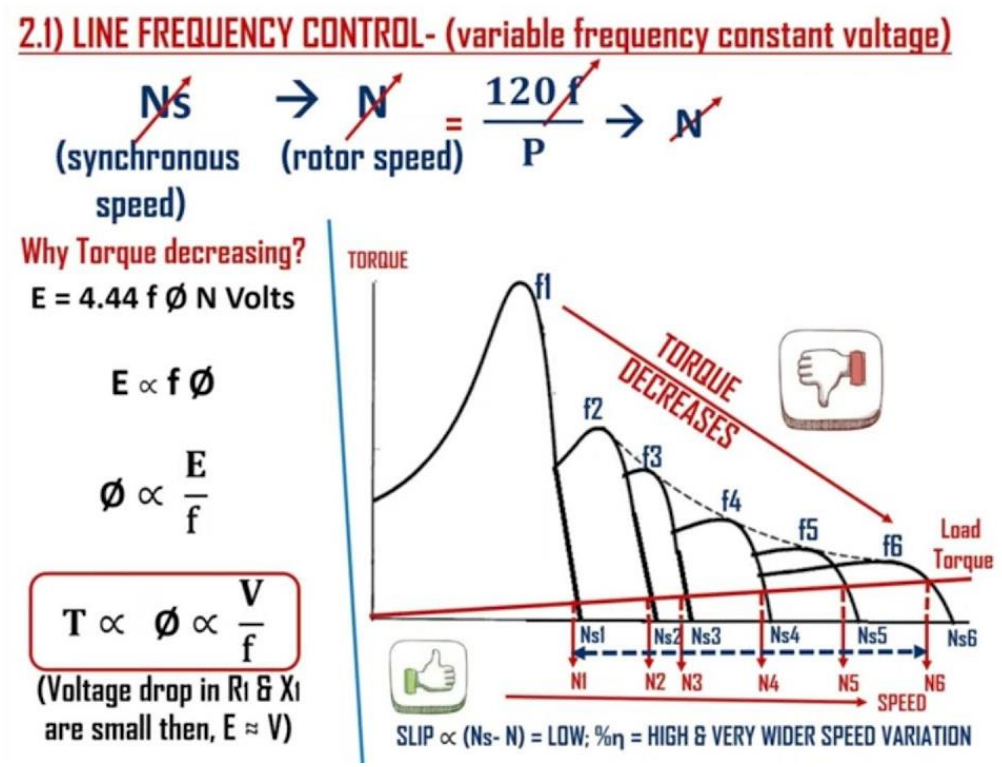

Figure 6: Non-V/f Controlled Induction Motor Speed-Torque Characteristic at Different Frequencies (Source 1).

1.3 Motor Specifications and Control Targets

Parameter	Value
Rotor Type	Squirrel-Cage
Motor Power	5 HP (3.677 kW)
Rated Voltage	460 V (L-L RMS)
Rated Frequency	60 Hz
Rated Speed	1750 RPM
Poles	4 poles
Supply Type	Three-phase AC
Control Method	Open-loop V/f

To match the motor's rated conditions using an SPWM inverter, we must set the amplitude modulation ratio (m_a) and the reference sine-wave signal frequency such that:

- Line-to-line RMS Output Voltage of the Inverter is 460 V at 60 Hz and this ratio, under V/f control, must be maintained for our operating range of frequencies.

- Line-to-line 460 V-RMS is approximately equal to 650 V-peak line-to-line output voltage. Thus, the peak line-to-line voltage to frequency relationship must follow the ratio 10.842 V/Hz (= 650 V / 60 Hz).
- Converting the peak line-to-line voltage to peak line-to-neutral voltage ($V_{L-N} = \frac{V_{L-L}}{\sqrt{3}}$) we get our final V/f control ratio of $\frac{V_{L-N}^{peak}}{f}$ = ***6.26 V/Hz***.

- Frequency and voltage increase proportionally (between a reasonable range, avoiding insulation breakdown and overcoming stator impedances).

1.4 Modulation Index Derivation

For three-phase SPWM, the amplitude modulation index m_a, which is the ratio between the amplitude of the reference sine wave to the triangular carrier wave, is defined as:

$$m_a = \frac{2V_{peak}}{V_{dc}} \text{ (Source 2)}$$

Meaning, this modulation index determines the amplitude of the fundamental frequency of our output from the given V_{dc}. Once we calculate our desired V_{peak} from the V/f control described above, we can then calculate the amplitude modulation index required to achieve it. Implementing this modulation index is as easy as varying the amplitude of the reference sine wave relative to the triggering triangle wave. As long as $m_a \leq 1$, we will have a linear relationship $V_o^1 = m_a V_{dc}$ between DC voltage source and fundamental output frequency.

For example, to produce a peak 460 V_{L-L}^{rms} output voltage (≈ 375.6 V_{L-N}^{peak}) with V_{dc} = 1200 V:

$$m_a = \frac{2 \cdot 375.6}{1200} \approx 0.626$$

This modulation index ensures that the inverter output matches the motor's rated voltage (460 V_{L-L}^{rms}) at 60 Hz. Lower RPM set points (and thus frequencies) require proportionally lower output voltages to maintain the constant V/f ratio.

1.5 Voltage and Frequency Sweep from Speed Set-Point

Speed Set-Point (RPM)	Frequency (Hz)	Output Voltage (V_{L-N}^{peak})	Modulation Index
1750	58.333	365.16	0.609
1500	50.000	313.00	0.522
1250	41.667	260.84	0.435
1000	33.333	208.66	0.348
750	25.000	156.50	0.261
500	16.667	104.34	0.174
250	8.333	52.16	0.087

Note 1: V_{dc} = 1200 V

Note 2: The relationship between speed set-point and frequency is treated as synchronous speed relationship $N_s = \frac{120 \cdot f}{p}$, neglecting slip speed inherent in induction motor operation. This explains the discrepancy in the rated frequency and rated RPM of the motor (60 Hz = 1800 RPM in an equivalent synchronous motor).

Note 3: $\frac{V_{L-N}^{peak}}{f}$ = *6.26 V/Hz*.

The frequency and modulation index are used internally in the SPWM controller to modulate the three-phase reference sine waves (120 degrees out of phase).

1.6 Induction Motor Load

Given the original concept behind choosing the motor's output power rating of powering a water pump, the load's torque-speed relationship was calculated to be similar to a pump load's ideal torque-speed characteristic.

Fans and pump type loads have a quadratic torque-speed characteristic with a constant coefficient (Source 3):

$$T = k \times \omega^2$$

The nominal torque in Newton-meters of our motor, given nominal power rating S = 5 HP = 3.730 kVA and nominal speed rating ω_s (rad/s) = 183.25 rad/s (= 1750 RPM), is:

$$T_n = \frac{S}{\omega_s} = 20.355\ N \cdot m$$

So, to get the coefficient in the quadratic torque-speed characteristic we simply use the nominal torque and nominal speed rating.

$$k = \frac{\mathrm{T_n}}{\omega^2} = 6.06 \times 10^{-4}$$

Thus, we have our load's torque-speed relationship! We can get the current rotor speed ω from measuring the output of Simscape's Asynchronous Machine block, calculate the load's torque from the formula above, and then feed it back into the torque mechanical input of the motor. This provides us with a nice model of a pump-loaded induction motor, as shown in Figure 7.

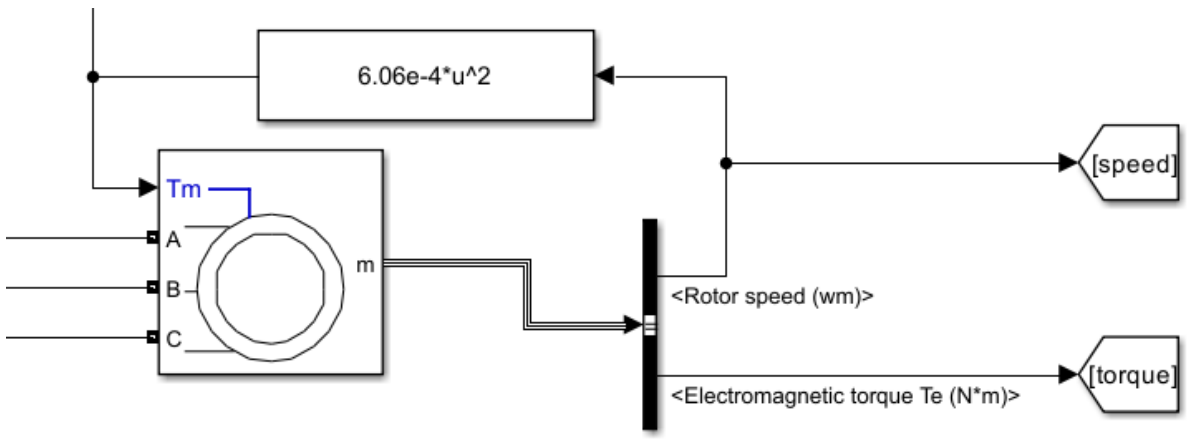

Figure 7: Simscape Specialized Power System's Asynchronous Machine with Quadratic Torque-Speed Characteristic

2. Simulation

2.1 Modeling Environment

The simulation was built in MATLAB/Simulink primarily using Simscape Specialized Power System components. A discrete time-step of 1e-6 was used. The main subsystems include:

- **DC Source:** A constant 1200 V DC input.
- **SPWM Inverter:** IGBT-based three-phase inverter modulated using SPWM, with 15 kHz switching frequency.
- **V/f Control Block:** Generates sine wave references for SPWM based on desired frequency and corresponding V/f-scaled amplitude.

- **Switching Harmonic Filter:** Low-pass RLC filter designed to cut-off the 15 kHz switching frequency.
- **Induction Motor:** Modeled using the Asynchronous Machine block configured with 5 HP (3.7 kW), 460 V, 1750 RPM ratings
- **Measurements:** Various comparisons to see how well controlled the motor's output is, including:
    - fundamental frequency amplitude at filter output versus V/f controller amplitude set-point
    - rotor speed in RPM versus controller synchronous RPM set-point
    - electromagnetic torque output versus calculated load torque fed as mechanical input to motor

The simulation was run for various RPM-changing conditions, from ramping between RPM set-points to doing stair-step changing of constant RPM set points. The purpose being to see how accurate the V/f control is and how quickly rotor speed can stabilize around the RPM set point of the controller. The full overview is shown in Figure 8.

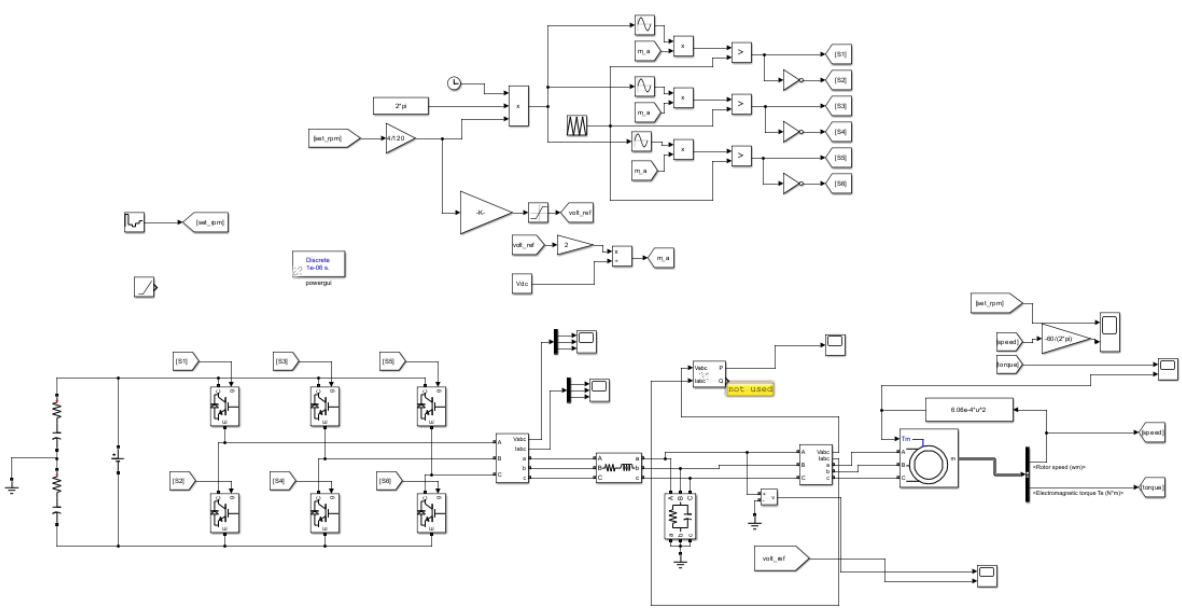

Figure 8: Full overview of the Simulink model.

2.2 Simulation Results and Waveform Observations

For this simulation, I had a repeating stair-step function that changes the speed set-point from 250 – 1750 RPM at each 500 ms interval – adding 250 RPM each time (as in the table at the end of Section 1)

Figure 9 below displays the RPM set point in yellow and the actual rotor speed in blue. As you can see, there are considerable amounts of oscillations at the start of each step and strange speed drops in the state transitions. I've tried to minimize the strange state transitions to no avail, unfortunately. As for the oscillations to a steady state speed present, I think they are reasonable for our motor and load type, as each block is only 0.5 secs to get up to speed and steady out.

Looking at the 1750 RPM block you can see a "steady-state error" present between the blue line's steady state value and the set RPM – this is easily explained by the fact that my system uses open-loop frequency control, we don't try to minimize error using things like PI controllers for the sake of simplicity.

Figure 10 shows the same simulation time-frame, this time showing the effectiveness of the V/f controller in changing the amplitude of the inverter's fundamental frequency based on the V/f ratio and our set reference frequency. The blue line is the voltage set-points and yellow is the waveform at the output of the RLC low-pass filter after the inverter.

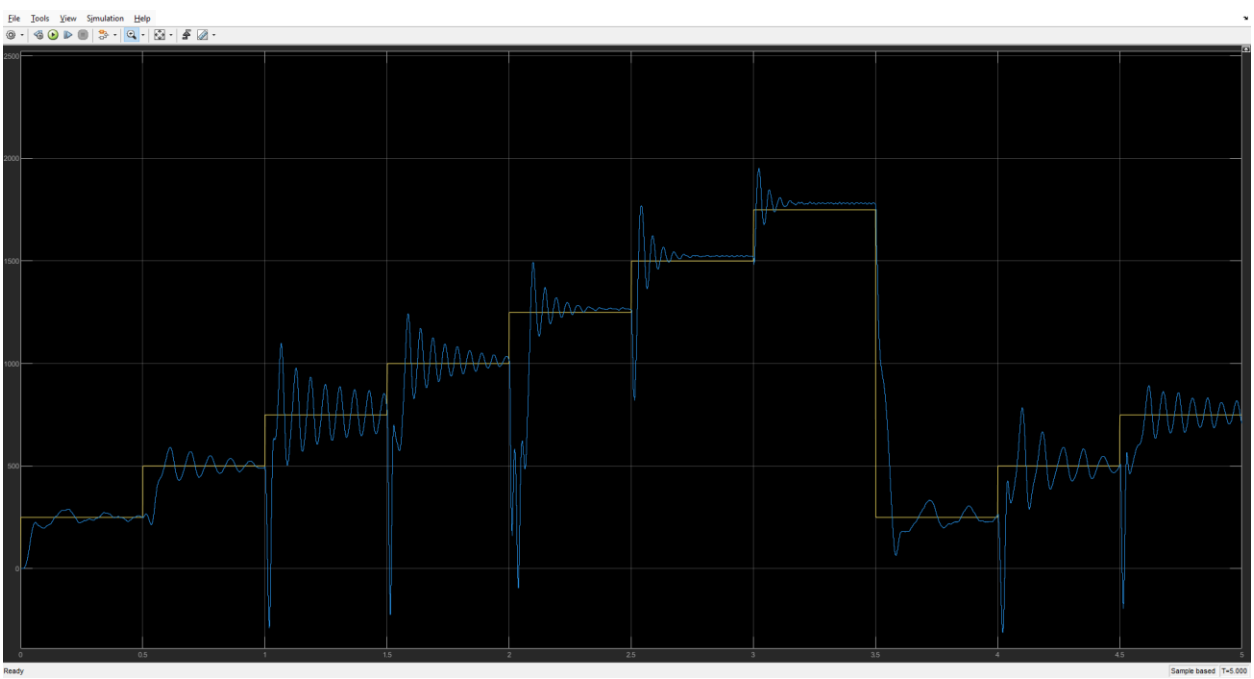

Figure 9: Set-Point RPM vs Actual Output Rotor Speed

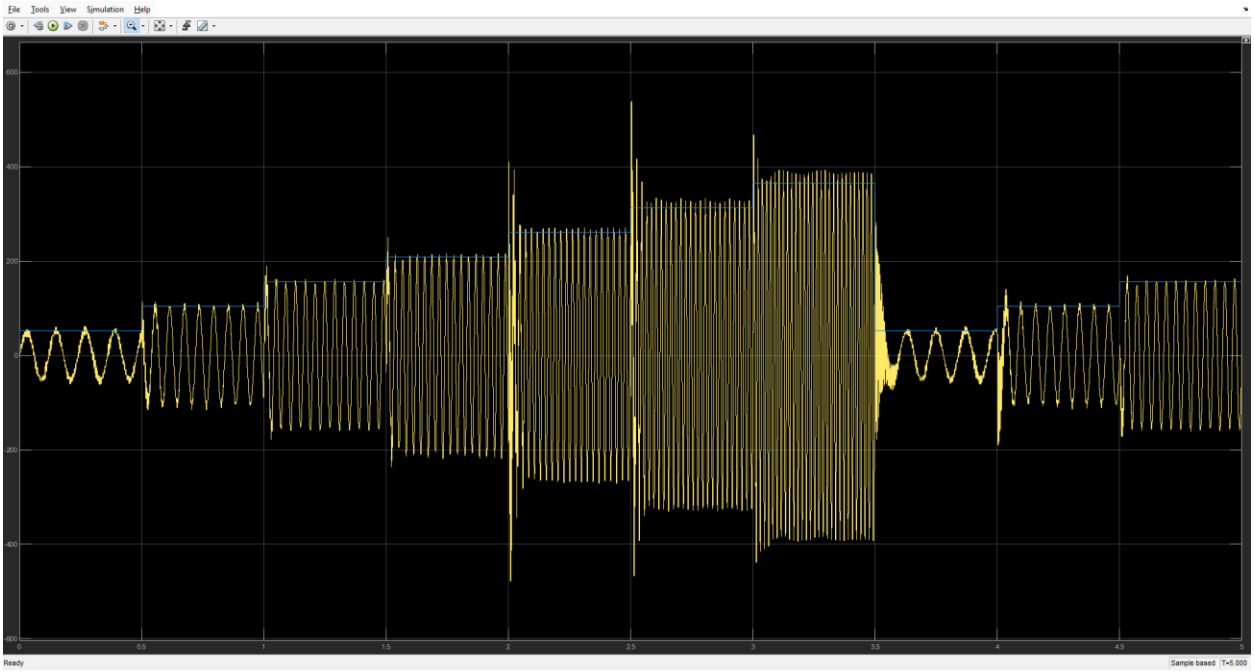

Figure 10: Set-Point Output Voltage Amplitude vs Filter Output Waveform

Not necessarily useful for comparison, but Figure 11 shows the three-phase SPWM inverter output before filtering!

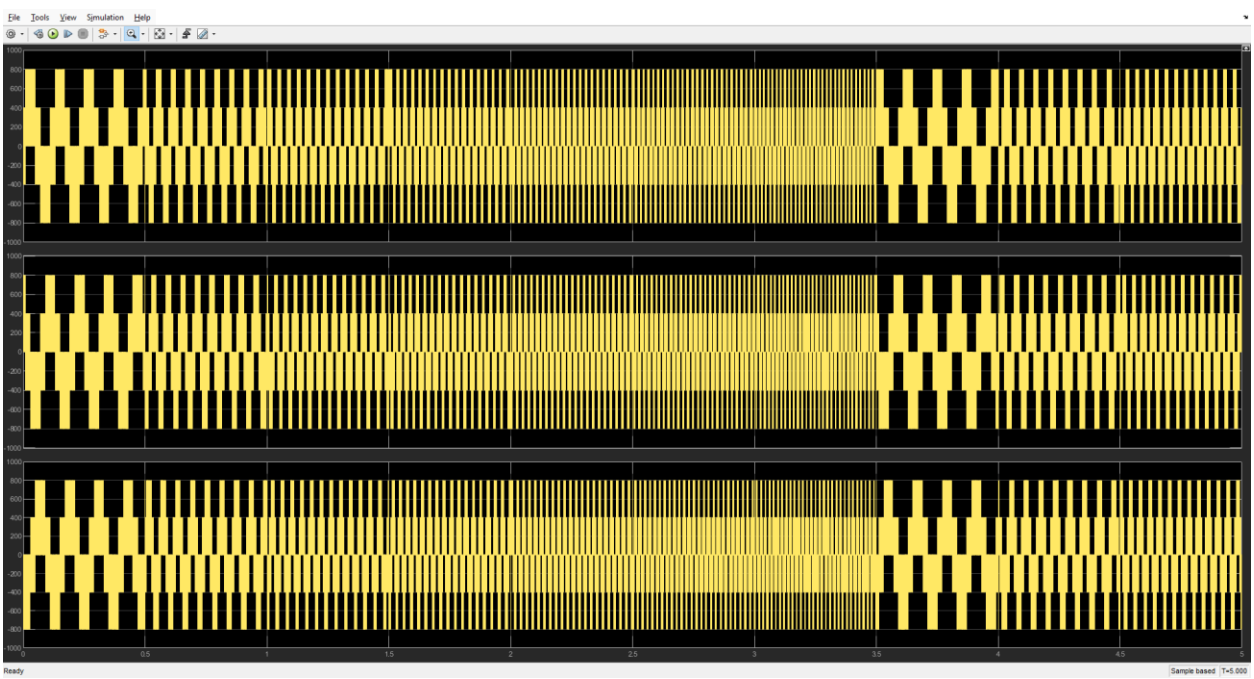

Figure 11: Three-Phase SPWM Inverter Output before Filtering

3. Conclusion and Discussion

This project demonstrated the successful design and simulation of a three-phase SPWM inverter driving an induction motor using open-loop V/f control. One limitation of open-loop V/f control is in its inability to account for slip speed of an induction motor, so it is not desirable for applications where precise speed control is needed. For more precise control, a closed-loop control system could be implemented that takes the rotor speed, gets the error between it and the desired speed and uses a PI controller to minimize that error. However, for the application that I envisioned and designed the parameters of this system for, as a water pump, precise speed control is not at all required and the steady state speed of the motor is not even that far off thanks to implementing open-loop V/f control and a load torque-speed characteristic that has minimal slip speed for the required torque range.

Incorporating feedback control to adjust voltage or frequency dynamically based on motor speed or torque is not the only thing that I could improve. For one, implementing overcurrent protection or soft-start logic would be absolutely necessary to actually implement this in real-life, as we get large current transients. Something like a Delta-Wye starter might be a good solution for minimizing start-up current peaks.

Overall, the system achieved its design goals and served as a strong demonstration of how SPWM inverters and V/f control work together in industrial motor drive applications. I personally learned a lot about just how hard simulating power electronics and modeling motors is in a stable manner.

Works Cited

1. Future of EEE, “Voltage/ Frequency (V/F) Control of Induction Motor - Open loop & Closed loop”, https://www.youtube.com/watch?v=HmB2Egay3m8
2. MATLAB Help Center (MathWorks), “PWM Generator (Three-phase, Three-level) Block”, https://www.mathworks.com/help/sps/ref/pwmgeneratorthreephasethreelevel.html
3. MATLAB Help Center (MathWorks), “Simulate Variable Speed Motor Control”, https://www.mathworks.com/help/sps/powersys/ug/simulating-variable-speed-motor-control.html